Parts List				
ITEM	QTY	PART No.	TITLE	WEBLINK
2	1	BB3819	Alu Box Assy for Gear Box Cl. 7	N/A
3	1	BB1680	Insert Class 6	N/A
4	1	BB1679	Protection Nose Class 7 Long	N/A
5	1	BB1678	Plantary Carrier Class 7 Extension Long	N/A
6	1	BA6403	Class 7 Gear Box 40kNm	http://e-sea.bluelogic.no/main.aspx?page=article&artno=BA6403
7	4	101020	Washer	
8	4	100851	Bolt	
9	2	100188	Bolt	
9	1	BC1793	Lock Assy Class 7 Gear Box	

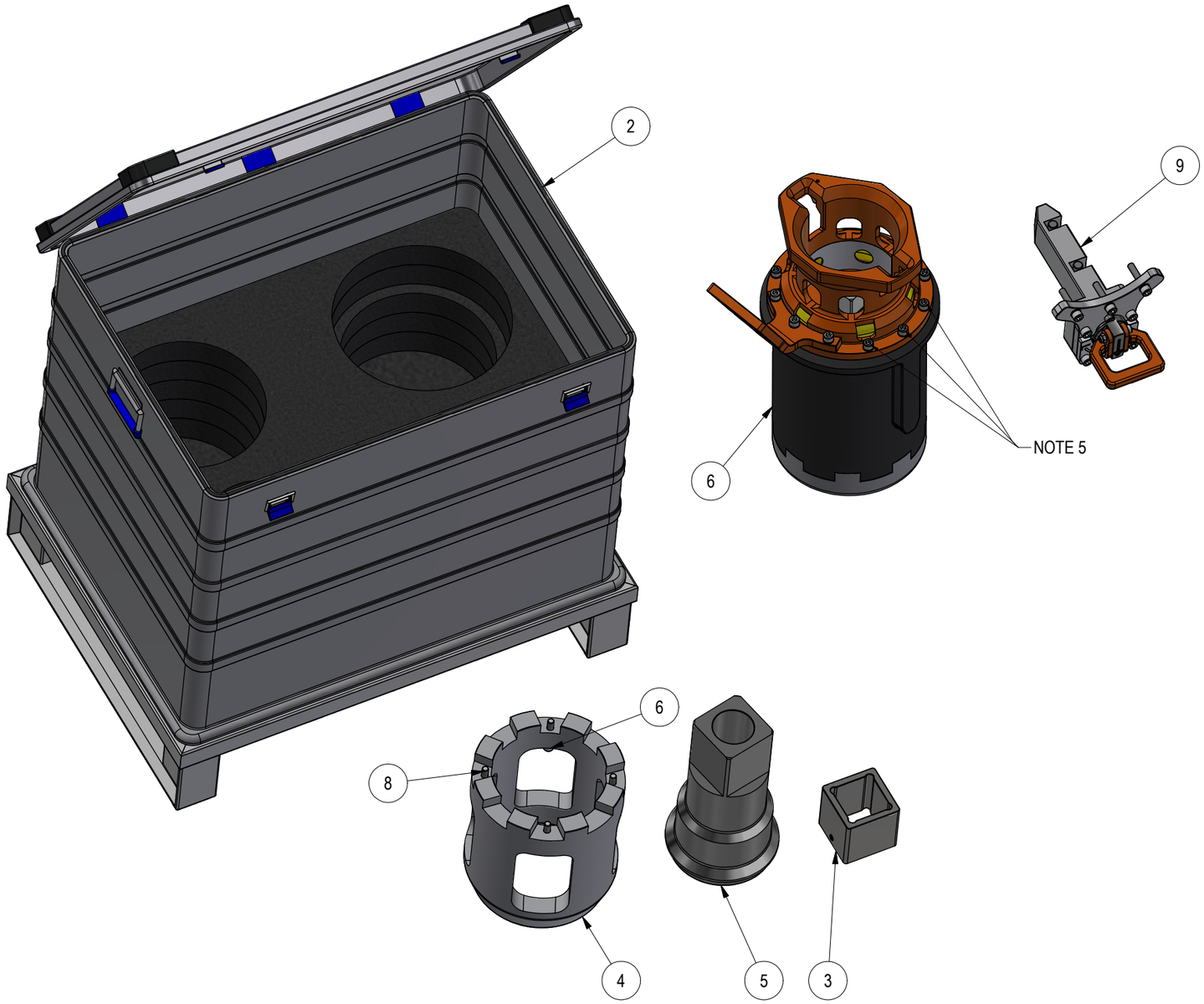

NOTE: 1
DESIGN CODE:
ISO 13628-8/API 17H

NOTE: 2
TECHNICAL CLASSIFICATION:

Article Type:	008-Actuation
Main Group:	8.03. ISO-6-7 Actuation
Intermediate Group:	8.46.04. Test Jig
Sub Group:	8.46.134.02. Intervention

NOTE: 3
INTERFACE INFORMATION:

Pressure Rating Bar:	300
Material:	N/A
Weight:	128,1 kg
Volume:	133,92 dm^3
Surface Area:	156436 cm^2
Hydraulic:	N/A
Mechanical:	ISO/API 17H Class 4 and Class 7
Electrical:	N/A
Com. & Protocol:	N/A

NOTE: 4
ADDITIONAL INFORMATION:
Mechanical Gear box with ISO Class 4 input and ISO Class 7 output
40kNm torque capacety.
The gearbox can be configured for Class 7 short and long.
A square insert is delivered to also meet Class 6 dimensions.
Gear ratio can be either 14.31:1, 6.0:1 or 3.79:1 for maximum flexibility.

NOTE 5
When using Item 9 BC1793 Lock Assy Class 7 Gear Box,
install lock in position indicated or 180 degrees apart.
Replace 3ea. existing bolts on gear box with 3ea. M10 x
50 bolts coming with lock assy.

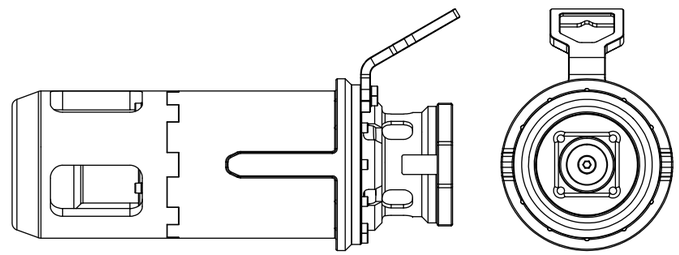

BB1677 Class 7 Gear Box 40kNm Long

Rev.	Date	Reason for issue	Revision change	Made	Chk'd	Appr.
02	7.7.2026	9-IFU (Issued for Use)		WTJ	PBI	WTJ
01	15.8.2025	9-IFU (Issued for Use)		HNJ	LGH	HNJ

BLUE LOGIC

Dwg Scale: NTS
Dwg Proj:
Dwg Format: A3

Drawing title: Gear Box Cl. 7 40kNm Arrangement with Optional Lock

Drawing number: BC3031

Rev. 02